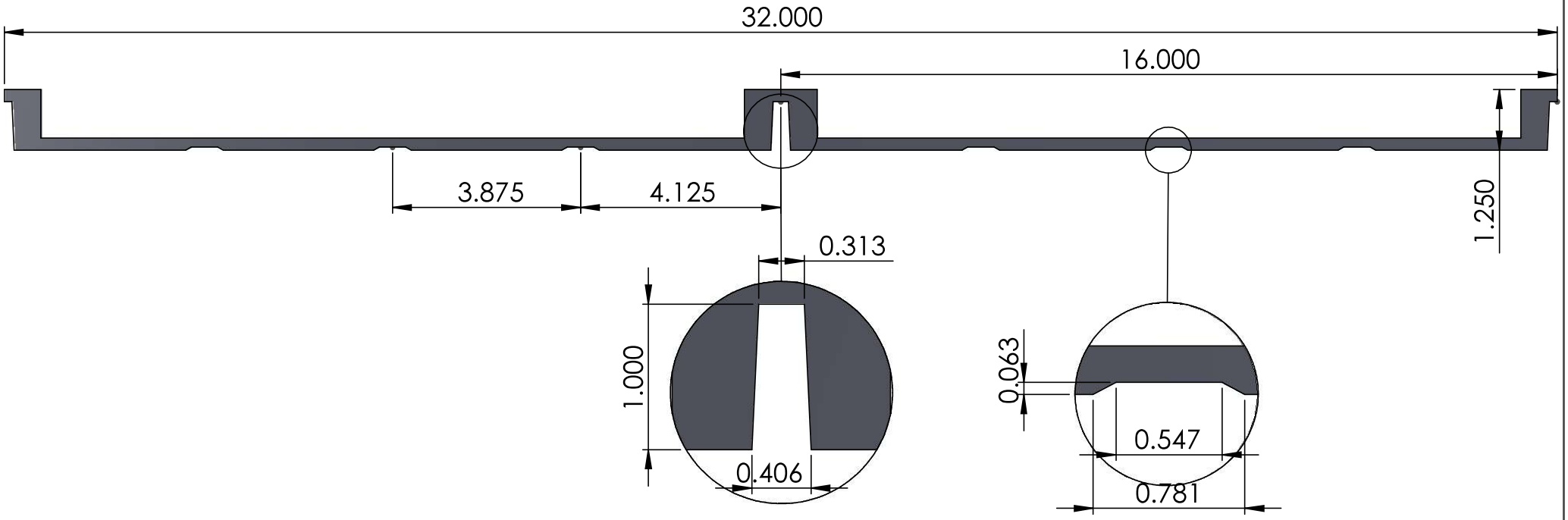

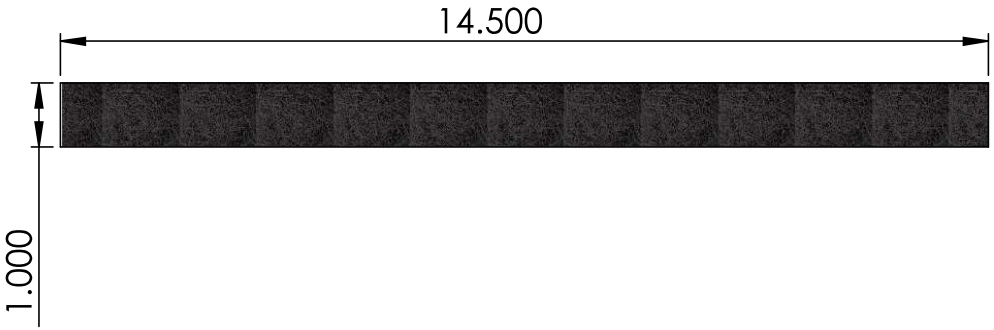

DESCRIPTION:

SL-16"